UNICARRIERS

Technical specifications

QX2 series

2.0-3.0 t



AC tech

world wide network

24/7 support

UNICARRIERS

STANDARD SPECIFICATIONS

September 2013		Counterbalance trucks Designation according VDI 3586	Data sheet for materials handling equipment				VDI 2198 Registration note
		Manufacturers Data and Design Characteristics					
CHARACTERISTICS	1.1	Manufacturer		UniCarriers			
	1.2	Model name		QX2-20	QX2-25	QX2-25L	QX2-30
		Model code		1Q2L20Q	1Q2L25Q	G1Q2L25Q	G1Q2L30Q
	1.3	Power unit: Electric, Diesel, Gasoline, LPG, others		Electric	Electric	Electric	Electric
	1.4	Operation: Sit, Hand, Pedestrian, Standing, Order picking		Sit	Sit	Sit	Sit
	1.5	Load capacity	Q (t)	2.0	2.5	2.5	3.0
	1.6	Load centre	c (mm)	500	500	500	500
	1.8	Front overhang	x (mm)	465	465	465	475
	1.9	Wheel base	y (mm)	1515	1515	1660	1660
WEIGHTS	2.1	Service weight (without battery)	kg	4395	4720	4785	5175
	2.2	Axle load with load, front/rear	kg	5580/815	6360/860	6440/845	7295/880
	2.3	Axle load without load, front/rear	kg	2305/2090	2270/2450	2485/2300	2530/2645
WHEELS & TIRES	3.1	Tyres front/rear (C=Cushion,SE=superelastic,P=pneumatic)		SE/SE			
	3.2	Tyre size, front		23 x 9-10	23 x 9-10	23 x 9-10	23 x 10-12
	3.3	Tyre size, rear		18 x 7-8	18 x 7-8	18 x 7-8	18 x 7-8
	3.5	Wheels, number front/rear (x=powered)		2x/2	2x/2	2x/2	2x/2
	3.6	Tread, front	b10 (mm)	975	975	975	1015
	3.7	Tread, rear	b11 (mm)	970	970	970	970
DIMENSIONS	4.1	Tilt Mast/carriage, forward/backward	α/β (°)	5/8	5/8	5/8	5/8
	4.2	Height mast fully lowered	h_1 (mm)	1995	1995	1995	1995
	4.3	Free lift	h_2 (mm)	150	150	150	150
	4.4	Lift height	h_3 (mm)	3000	3000	3000	3000
	4.5	Height mast fully extended	h_4 (mm)	4255	4255	4255	4255
	4.7	Overhead guard height	h_6 (mm)	2235*	2235*	2235*	2235*
	4.8	Seat height/Standing height	h_7 (mm)	1055	1055	1055	1055
	4.12	Towing coupler height	h_{10} (mm)	230	230	230	230
	4.19	Overall length	l_1 (mm)	3440	3440	3585	3595
	4.20	Length to fork face	l_2 (mm)	2340	2340	2485	2495
	4.21	Overall width	b_1 (mm)	1180	1180	1180	1250
	4.22	Fork dimensions	s,e,l (mm)	40x100x1100	40x100x1100	40x100x1100	45x100x1100
	4.23	Carriage DIN 15173, Class / Form A,B		2A	2A	2A	3A
	4.24	Carriage width	b_3 (mm)	1020	1020	1020	1020
	4.31	Mast underclearance loaded	m_1 (mm)	115	115	115	115
	4.32	Underclearance centre wheelbase	m_2 (mm)	105	105	105	105
	4.33	Right angle stacking aisle with pallet 1000x1200 across forks	Ast (mm)	3655	3655	3805	3815
	4.34	Right angle stacking aisle with pallet 800x1200 across forks	Ast (mm)	3455	3455	3605	3615
	4.35	Turning radius	Wa (mm)	1990	1990	2140	2140
PERFORMANCE	5.1	Travelling speed with/without load	km/h	20.5/21	20/21	20/21	18.5/21
	5.2	Lifting speed with/without load	mm/s	510/650	470/650	470/650	450/550
	5.3	Lowering speed with/without load	mm/s	500/500	500/500	500/500	500/500
	5.6	Maximum drawbar pull, with/without load, 3 minute rating	N	15735/15956	15735/15956	15735/15956	15735/15956
	5.8	Maximum gradeability, with/without load, 5 minute rating	%	19/30	16/27	16/27	14/24
	5.9	Acceleration with/without load	s	4.8/4.2	5.0/4.3	5.0/4.4	5.0/4.7
	5.10	Service brake		Hydraulic/Electric			
DRIVE	6.1	Traction motor performance, 1hr. Rating	kW	9.9	9.9	9.9	9.9
	6.2	Lift motor performance, 20% rating	kW	14.2	14.2	14.2	14.2
	6.3	Battery according		DIN43536A			
	6.4	Battery voltage/rated capacity (5h)	V/Ah	80/480**	80/480**	80/600**	80/600**
	6.5	Battery weight (±5%)	kg	1547	1547	1872	1872
OTHERS	8.1	Type of drive control		UniCarriers AC TECH - MOS-FET inverter			
	8.2	Working pressure attachments	bar	127	127	127	127
	8.3	Oil flow for attachments	L/min	41.5	41.5	41.5	41.5

* Low overhead guard available: h6 = 2120 mm. ** Other battery capacities available on request.

DIMENSIONS

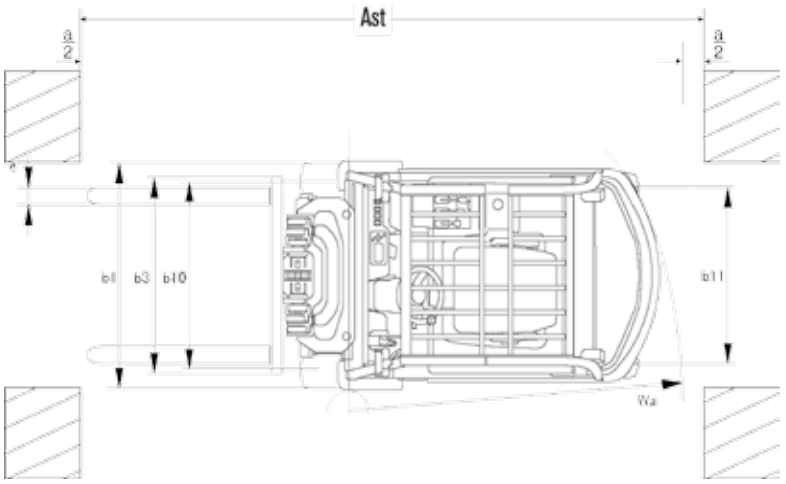

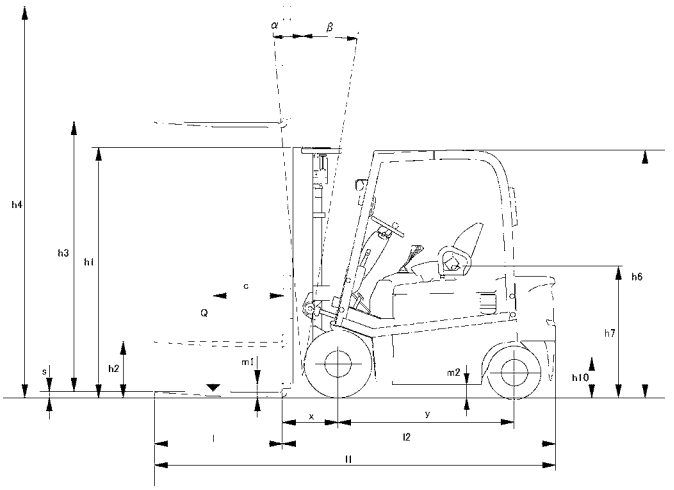

MAST SPECIFICATIONS & LOAD CAPACITIES: QX2: 2.0 - 2.5 TONNE

Mast type	Mast name	Maximum fork height	Overall height			Free lift		Tilt angle Forward/ backward	Load capacity[2] Load center 500 mm	
			Fully lowered	Fully extended						
				Without backrest	Std backrest	Without backrest	Std backrest		2.0 tonne	2.5 tonne
		mm[1]	mm[1]	mm[1]	mm[1]	mm[1]	mm[1]	degrees	kg[1]	kg[1]
TWO STAGE WIDE VIEW	2W300	3000	1995	3645	4045	150	150	5/8	2000	2500
	2W330	3300	2145	3945	4345	150	150	5/8	2000	2500
	2W350	3500	2280	4145	4545	150	150	5/8	2000	2500
	2W370	3700	2405	4345	4745	150	150	5/8	2000	2500
	2W400	4000	2595	4645	5045	150	150	5/8	2000	2500
	2W450	4500	2845	5145	5545	150	150	5/8	2000	2500
	2W500	5000	3095	5645	6045	150	150	5/8	1950	2450
TWO STAGE FULL FREE	2F300	3000	1995	3680	4045	1355	990	5/8	2000	2500
	2F330	3300	2145	3980	4345	1505	1140	5/8	2000	2500
	2F350	3500	2280	4180	4545	1640	1275	5/8	2000	2500
	2F370	3700	2405	4380	4745	1765	1400	5/8	2000	2500
	2F400	4000	2595	4680	5045	1955	1590	5/8	2000	2500
THREE STAGE FULL FREE	3F385	3850	1845	4530	4895	1210	840	5/5	2000	2500
	3F430	4300	1995	4980	5345	1360	990	5/5	2000	2500
	3F475	4750	2145	5430	5795	1510	1140	5/5	2000	2500
	3F515	5150	2280	5830	6195	1645	1275	5/5	1900	2300
	3F550	5500	2405	6180	6545	1770	1400	5/5	1800	2100
	3F600	6000	2595	6680	7045	1960	1590	5/5	1650*	1850*
	3F650	6500	2845	7180	7545	2210	1840	5/5	1400*	1550*
	3F700	7000	3095	7680	8045	2460	2090	5/5	1150*	1300*
THREE STAGE FULL FREE WIDE VIEW	3V360	3600	1845	4225	4645	1130	840	5/5	1900	2350
	3V405	4050	2015	4675	5095	1280	1010	5/5	1900	2350
	3V450	4500	2145	5125	5545	1430	1140	5/5	1900	2350
	3V490	4900	2280	5525	5945	1560	1275	5/5	1800	2150
	3V525	5250	2405	5875	6295	1690	1400	5/5	1700	2050*
	3V575	5750	2595	6375	6795	1880	1590	5/5	1550*	1750*
	3V633	6330	2845	6925	7375	2130	1840	5/5	1300*	1450*
	3V688	6880	3095	7505	7925	2380	2090	5/5	1050*	1200*

[1] 1 inch = 25.4 mm, 1 kg = 0.4536 lb * Load capacity with optional wide superelastic tires

DIMENSIONS

MAST SPECIFICATIONS & RATED CAPACITIES: QX2: 3.0 TONNE

Mast type	Mast name	Maximum fork height	Overall height			Free lift		Tilt angle Forward/ backward	Load capacity[2] Load center 500 mm
			Fully lowered	Fully extended		Without backrest	Std backrest		3.0 tonne
				Without backrest	Std backrest				
		mm[1]	mm[1]	mm[1]	mm[1]	mm[1]	mm[1]	degrees	kg
TWO STAGE WIDE VIEW	2W300	3000	1995	3645	4140	155	155	5/8	3000
	2W330	3300	2145	3945	4440	155	155	5/8	3000
	2W350	3500	2280	4145	4640	155	155	5/8	3000
	2W370	3700	2405	4345	4840	155	155	5/8	3000
	2W400	4000	2595	4645	5140	155	155	5/8	3000
	2W450	4500	2845	5145	5640	155	155	5/8	2950
	2W500	5000	3095	5645	6140	155	155	5/8	2800
TWO STAGE FULL FREE	2F300	3000	1995	3680	4140	1365	900	5/8	3000
	2F330	3300	2145	3980	4440	1515	1050	5/8	3000
	2F350	3500	2280	4180	4640	1650	1185	5/8	3000
	2F370	3700	2405	4380	4840	1775	1310	5/8	3000
	2F400	4000	2595	4680	5140	1965	1500	5/8	3000
THREE STAGE FULL FREE	3F385	3850	1995	4480	4990	1410	900	5/5	3000
	3F430	4300	2145	4930	5440	1560	1050	5/5	3000
	3F475	4750	2280**	5380	5890	1695	1185	5/5	2850
	3F515	5150	2405	5780	6290	1820	1310	5/5	2750
	3F550	5500	2595	6130	6640	2010	1500	5/5	2400
	3F600	6000	2845	6630	7140	2260	1750	5/5	2050
	3F650	6500	3095	7130	7640	2510	2000	5/5	1750
	3F700	7000	3345	7630	8140	2760	2250	5/5	1400
THREE STAGE FULL FREE WIDE VIEW	3V385	3850	1995	4480	4990	1280	900	5/5	2800
	3V430	4300	2145	4930	5440	1430	1050	5/5	2800
	3V470	4700	2280	5330	5840	1560	1185	5/5	2650
	3V505	5050	2405	5680	6190	1690	1310	5/5	2600
	3V555	5550	2595	6180	6690	1880	1500	5/5	2250
	3V600	6000	2845	6630	7140	2130	1750	5/5	1900
	3V650	6500	3095	7130	7640	2380	2000	5/5	1650
	3V700	7000	3345	7630	8140	2500	2250	5/5	1300

[1] 1 inch = 25.4 mm, 1kg = 0.4536 lb ** Special containermast available, fully lowered 2145 mm.

It's all about the price. But what price?

Reduce your Total Cost of Operation with UniCarriers

We agree. Price is everything. Or to be more specific: your Total Cost of Operation (TCO). That's why we're so focused on cutting costs and improving your material handling. The truck and its performance play an important role, but this is even more about how we can support you in optimising your warehouse operations to give you the best value for your money. Which – in the long run – is what creates a winner.

UNICARRIERS CORPORATION
U-QX2.S.EN/UCE-2015-01
UniCarriers Corporation reserves the right to make any changes without notice concerning colours, equipment or specifications detailed in this brochure, or to discontinue individual models. The colours of vehicles delivered may differ slightly from those in this brochure. The specifications vary for different countries depending on local market conditions. Please consult your local dealer to ensure that the vehicle delivered accords with your expectations. All values are determined based on the standard condition and may vary, due to motor and system tolerances, condition of the truck and operational conditions. Some equipment shown on photos are optional.